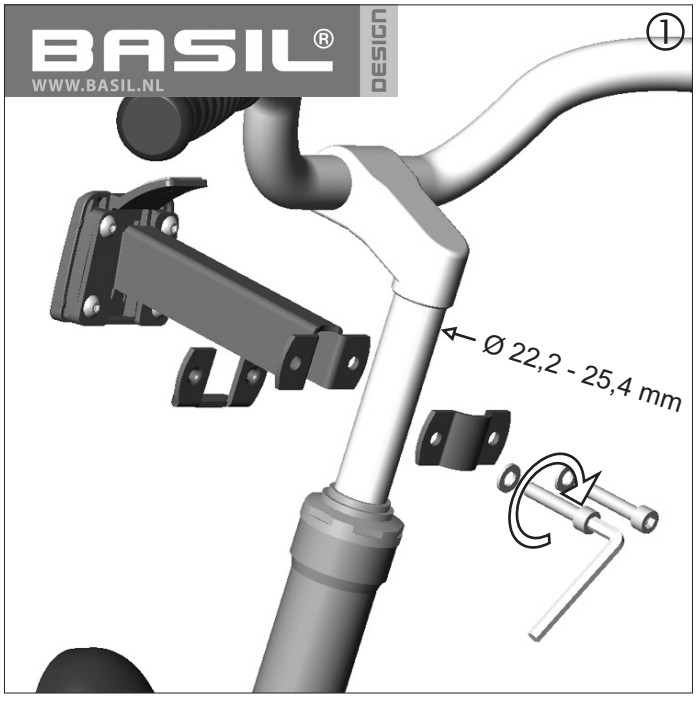

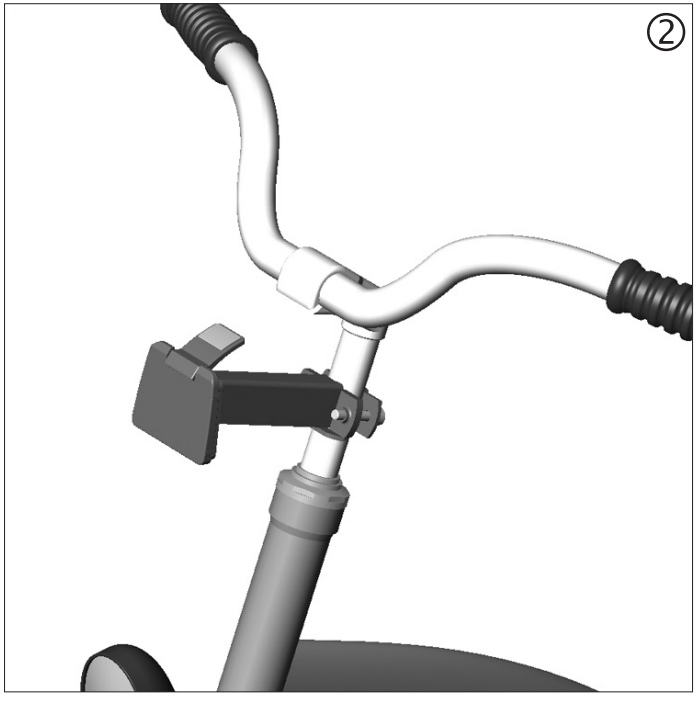

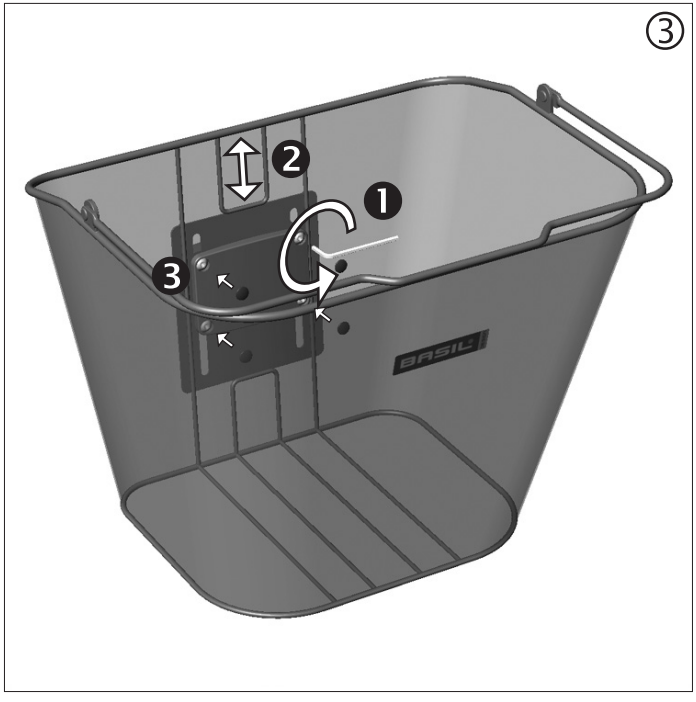

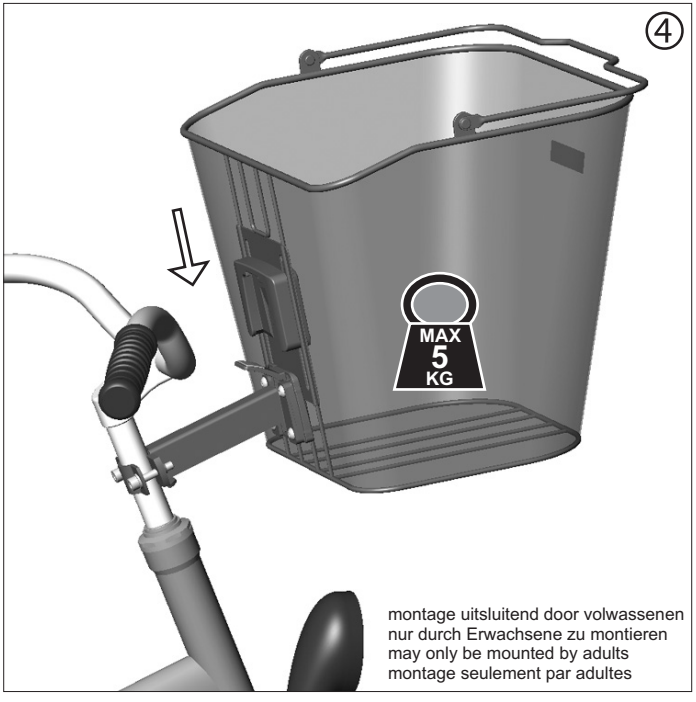

 © all rights reserved