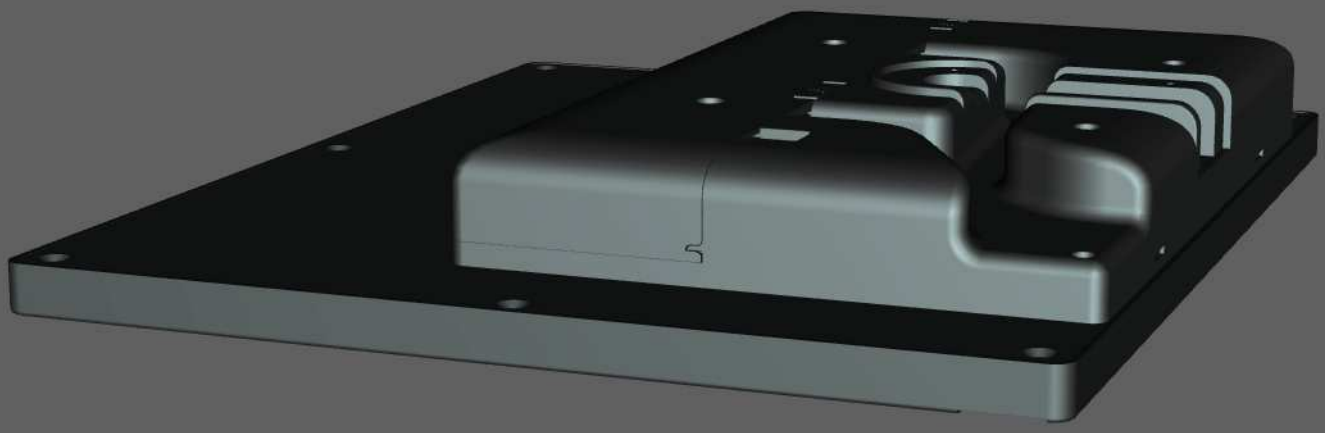

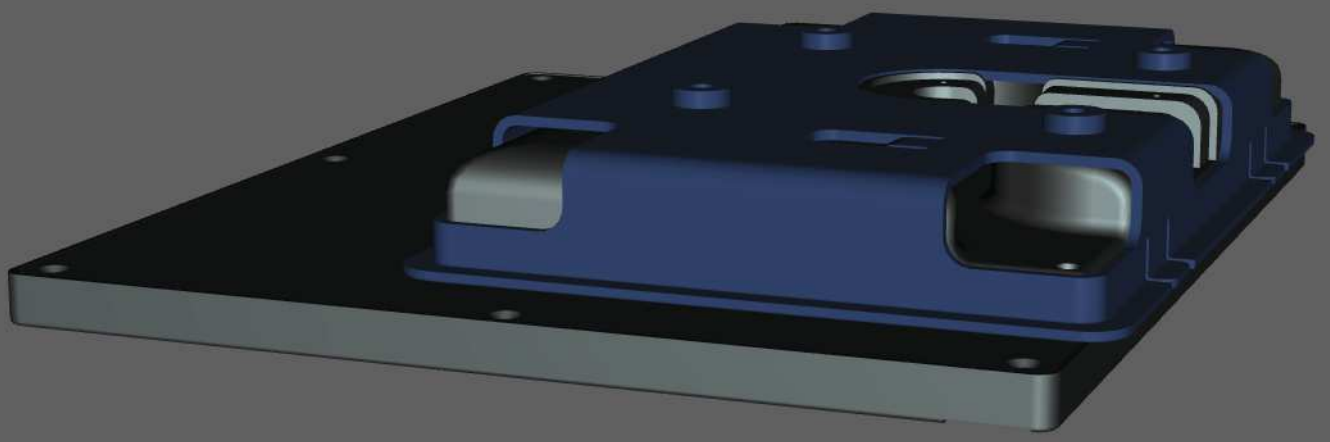

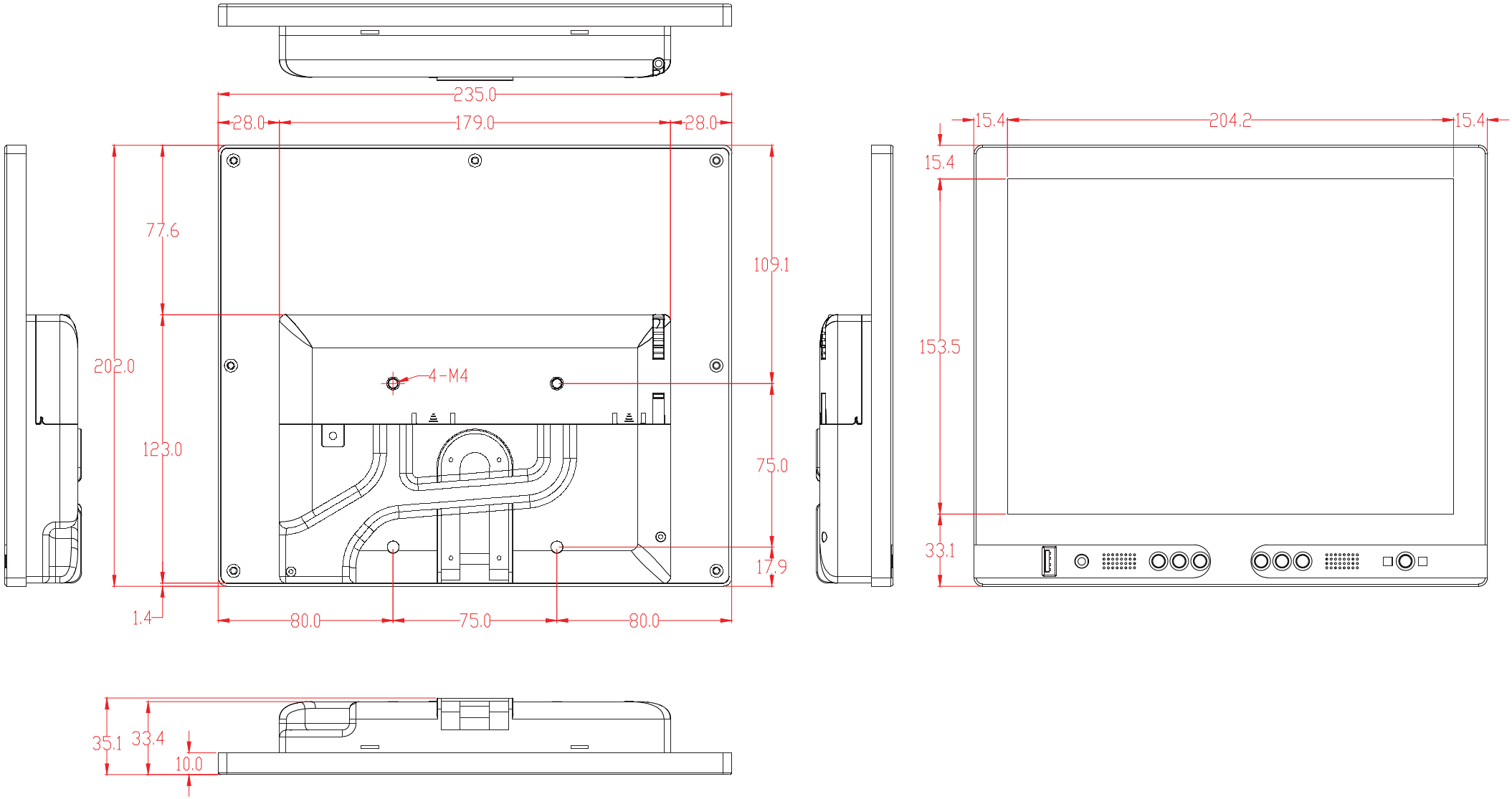
235.0
28.0
179.0
28.0
77.6
109.1
202.0
4-M4
123.0
75.0
17.9
1.4
80.0
75.0
80.0
15.4
204.2
15.4
15.4
153.5
33.1
35.1
33.4
10.0